FLEXION
Gripping Solutions

Inspired by the ultimate gripper: the human hand

- **Segmented fingers flex to close on parts like a hand**
- **Configurable design provides for a wide range of gripping solutions**
- **Can be reconfigured and repurposed**

ADAPTABLE
CONFIGURABLE
VERSATILE

ISO 9001 REGISTERED
Quality Management System Certified

Patent Pending

Member of the MAC Distributor Network

phdinc.com

phd Empowering Automation

FG

Key Features and Benefits

- **PROBLEMS SOLVED** - Flexion's distinctly untraditional design solves many challenges that previously had no answer.
- **ADAPTIVE DESIGN** - The unique finger module, similar to a human finger, conforms and adapts to the user's workpiece. When actuated, the internal tendon system engages multiple joints to either encapsulate the part or grip by the fingertips.
- **WIDE RANGE OF FORCE** - The adjustment of the operating pressure allows for a wide range of usable force to provide industrial strength grip for demanding applications or a delicate touch for soft and sensitive product handling.
- **CONFIGURABLE SYSTEM** - Finger modules mount to a gripper hub in either parallel or radial configuration. Finger modules can be mounted in arrays of one to five fingers in each hub position to suit the user's unique requirements. In addition, fingers can be reconfigured by the user as needed to suit multiple purposes.
- **DIRECT ROBOT MOUNTING** - The configured system follows ISO 9409 mounting standards to mount directly to most robots on the market. Pneu-Connect® mounting and the URCap software package provide seamless integration with UR robots.
- **SENSOR READY** - Each finger can be equipped with up to two JC1 switches to sense positions such as "part gripped", "missed part", or "starting position."
- **ANGULAR ADJUSTMENT** - Finger modules can be rotated on the hub to spread opposing finger arrays apart or together for optimal workpiece encapsulation.
- **CHOICE OF FINGERTIPS** - A rounded-style tip provides greater grip force while an edged-style tip assists with picking up small items from flat surfaces.

Radial Hub Models

Utilizes 3 finger arrays, ideal for handling circular objects

Parallel Hub Models

Utilizes 2 finger arrays, with up to 5 fingers per array

PARALLEL CONFIGURATION SHOWN

(See pages 4 and 5 for all possibilities)

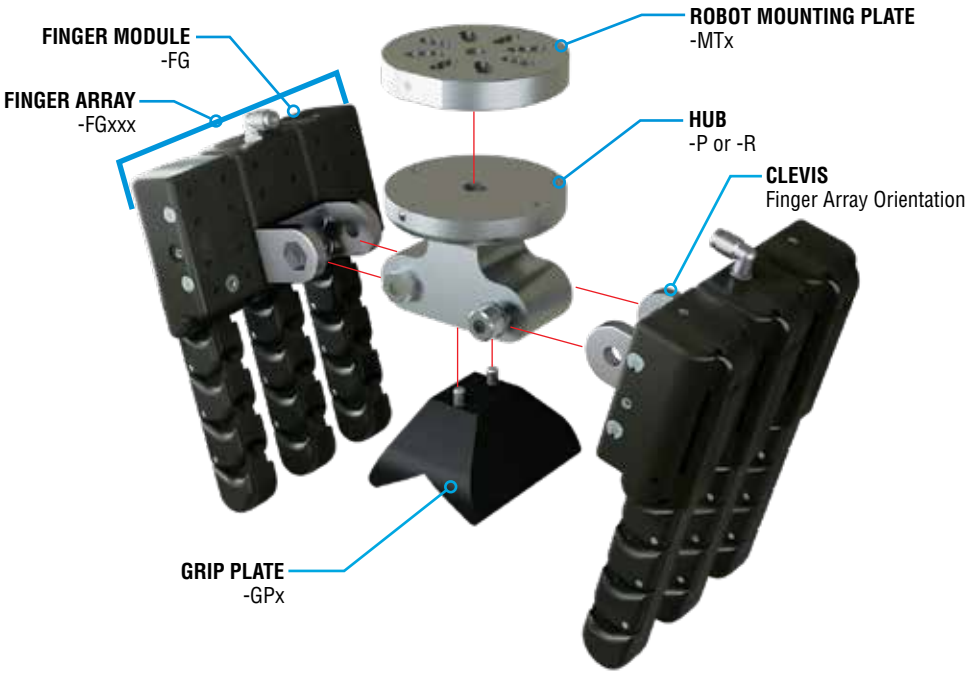

12 AVAILABLE CONFIGURATIONS: Series FG

These twelve configurations are currently available assembled. Contact PHD Applications Engineering for more configurations and assistance.

Each Flexion configuration can be ordered with optional Grip Plates (-GPx), Robot Mounting Plates (-MTx) and Switch bundles. See the example below. For complete option availability, see the top of page 5.

Flexion Developer Solutions Kits are available, see page 6.

Example: **FGCBP - 5 - 20 x 2 -FG410 - FG410** - GPA - MTB - SCNK

PARALLEL CONFIGURATIONS

FGCBP - 5 - 20 x 2 - FG410 - FG410
- GPx - MTx - Sxxx

FGCBP - 5 - 20 x 2 - FG420 - FG420
- GPx - MTx - Sxxx

FGCBP - 5 - 20 x 2 - FG410 - FG420
- GPx - MTx - Sxxx

FGCBP - 5 - 20 x 2 - FG420 - FG430
- GPx - MTx - Sxxx

FGCBP - 5 - 20 x 2 - FG450 - FG450
- GPx - MTx - Sxxx

FGCBP - 5 - 20 x 2 - FG440 - FG450
- GPx - MTx - Sxxx

FGCBP - 5 - 20 x 2 - FG421 - FG422
- GPx - MTx - Sxxx

FGCBP - 5 - 20 x 2 - FG421 - FG435
- GPx - MTx - Sxxx

FGCBP - 5 - 20 x 2 - FG435 - FG435
- GPx - MTx - Sxxx

FGCFP - 5 - 20 x 2 - FG420 - FG420
- GPx - MTx - Sxxx

RADIAL CONFIGURATIONS

FGCBR - 5 - 20 x 3 - FG410 - FG410 - FG410 - GPx - MTx - Sxxx

FGCBR - 5 - 20 x 3 - FG420 - FG420 - FG420 - GPx - MTx - Sxxx

TO ORDER SPECIFY:
Product, Action, Finger Array Orientation, Hub, Design No., Size, Number of Finger Arrays, Finger Array Specification Fields, Grip Plate, Robot Mounting Plate, and Switches.

Gray shaded codes are not available at this time. Contact PHD for availability.

ACTION
C - Single Acting, Block Mounting

HUB (See Note 1)
R - 3-Clevis Radial Hub
P - 2-Clevis Parallel Hub
BLANK - No Hub

SIZE
20 - 0.800 Wide Segments

DESIGN NO.*
5 - Metric

NUMBER OF FINGER ARRAYS (See Note 2)
1 - 1 Array
2 - 2 Arrays
3 - 3 Arrays

FINGER ARRAY SPECIFICATION FIELD (See Note 3)
See diagrams on next page for possible combinations.

FINGER STYLE
FG - Round Tip

NUMBER OF FINGER SEGMENTS
4 - 4 Segments

ARRAY CONFIGURATION (See configuration diagrams)

FG C B P - 5 - 20 x 2 - FG 4 10 - FG 4 10

Ordering data continued on next page →

PRODUCT
Configurable FLEXION Finger Gripper System

FINGER ARRAY ORIENTATION
A - High Mount, Inward Facing Grip
B - Low Mount, Inward Facing Grip
C - High Mount, Inward Grip, With Clevis Spacer
D - Low Mount, Inward Grip, With Clevis Spacer
E - High Mount, Outward Facing Grip
F - Low Mount, Outward Facing Grip
G - High Mount, Outward Grip, With Clevis Spacer
H - Low Mount, Outward Grip, With Clevis Spacer
BLANK - No Hub Attachment

FINGER STYLE
FG - Round Tip

NUMBER OF FINGER SEGMENTS
4 - 4 Segments

ARRAY CONFIGURATION (See configuration diagrams)

FINGER ARRAY SPECIFICATION FIELD (See Note 3)
See diagrams on next page for possible combinations.

NOTES:
1) If "Finger Array Orientation" field is blank, "Hub" field must also be blank.
2) 1 Array if "Hub" field is blank. 2 Arrays for xFGxxP. 3 Arrays for xFGxxR.
3) Finger Array Specification Field - Number of fields should match number of finger arrays. Example: FGCBP-5-20x**2-FG410-FG410**-GPA-MTA-SCNK1
4) *Design number dictates imperial or metric mountings. Ports are interchangeable.
5) Corrosion-resistant fasteners standard.

CONFIGURATING A SYSTEM

For visual assistance with ordering a Flexion Gripper solution

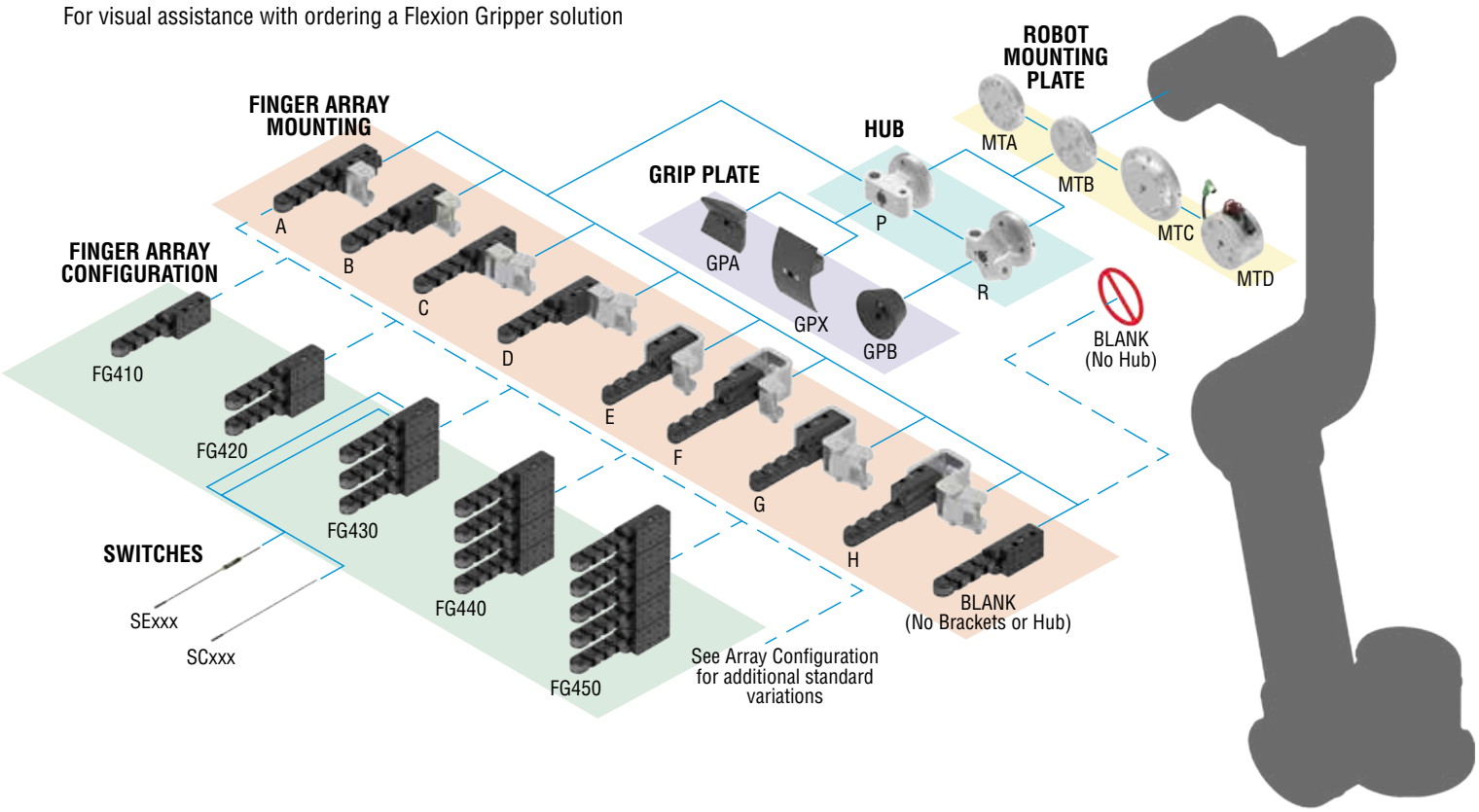

Ordering data continued from previous page

- GPA - MTA - SC N K 1

GRIP PLATE
GPA - V-Block (xFGxxP only)
GPB - Centering Cone (xFGxxR only)
GPX - Convex Plate (xFGxxP only)

ROBOT MOUNTING PLATE
MTA - ISO 31.5 mm, 40 mm, 50 mm Bolt Circle
MTB - 56 mm Bolt Circle
MTC - ISO 63 mm & 80 mm Bolt Circle
MTD - Pneu-Connect

BUNDLED SWITCH SERIES
SC - Series JC1SDx-x Single Position Switch
SE - Series JC1STP-x Teachable Switch (PNP only)

SWITCH CIRCUITRY
N - NPN (Sink)
P - PNP (Source)

CABLE TYPE
K - Quick Connect (JC1SDx-K, JC1SPT-K)
2 - 2 meter Length Cable (JC1SPT-2)
5 - 5 meter Length Cable (JC1SDx-5)

NUMBER OF SWITCHES
1 - 1 Switch
2 - 2 Switches
3 - 3 Switches
4 - 4 Switches
5 - 5 Switches
6 - 6 Switches
7 - 7 Switches
8 - 8 Switches
9 - 9 Switches

FINGER ARRAY CONFIGURATIONS

See page 3 for current available configurations. Blue shaded areas below indicate location of clevis mounting to finger array.

1 Finger Module

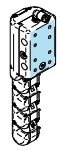
FG410

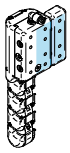
1 Half-width Spacer
FG411

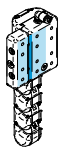
1 Half-width Spacer
FG412

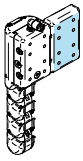
1 Full-width Spacer
FG413

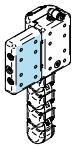
1 Full-width Spacer
FG414

2 Finger Modules

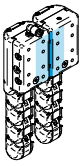
FG420

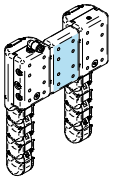
1 Full-width Spacer
FG421

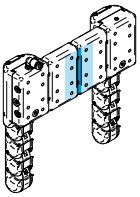
2 Full-width Spacers
(Parallel Configuration Only)
FG422

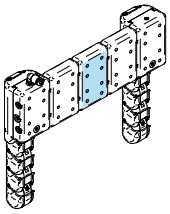
3 Full-width Spacers
(Parallel Configuration Only)
FG423

3 Finger Modules

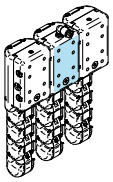
FG430

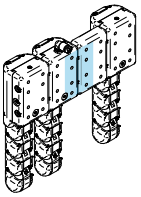
1 Full-width Spacer
FG431

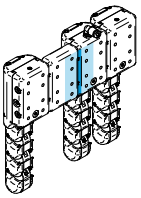
1 Full-width Spacer
(Parallel Configuration Only)
FG432

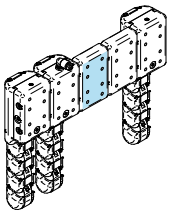
2 Full-width Spacers
(Parallel Configuration Only)
FG433

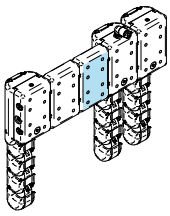
2 Full-width Spacers
(Parallel Configuration Only)
FG434

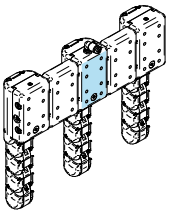
2 Full-width Spacers
(Parallel Configuration Only)
FG435

4 Finger Modules

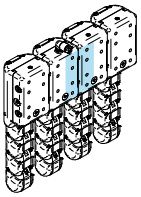
(Parallel Configuration Only)
FG440

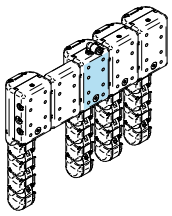
1 Full-width Spacer
(Parallel Configuration Only)
FG441

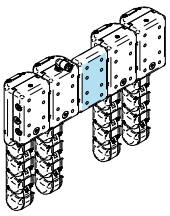
1 Full-width Spacer
(Parallel Configuration Only)
FG442

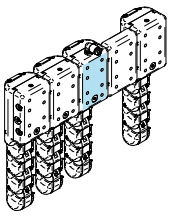
1 Full-width Spacer
(Parallel Configuration Only)
FG443

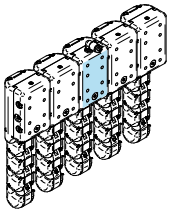
(Parallel Configuration Only)
FG444

FLEXION DEVELOPER SOLUTIONS KITS

The Developer Solutions Kits contain the parts to build a large variety of combinations, based on the type and size of kit purchased. There are either Parallel or Radial kit types and each have three options for quantity of fingers and related parts. These kits provide the ability to test different gripper configurations with your applications to determine the optimal setup needed.

TO ORDER SPECIFY:
Base No., Robot Mounting Plate, Switches and Valve.

PARALLEL SOLUTIONS KIT BASE NO.
(See kit contents listed below)
91662-04-014 - Small, 4 Finger Modules
91662-06-014 - Medium, 6 Finger Modules
91662-10-014 - Large, 10 Finger Modules

ROBOT MOUNTING PLATE
01 - ISO 31.5 mm, 40 mm, 50 mm Bolt Circle
02 - 56 mm Bolt Circle
03 - ISO 63 mm & 80 mm Bolt Circle

91662-04-014 - 01 - 01 - 1

RADIAL SOLUTIONS KIT BASE NO.
(See kit contents listed below)
91663-03-014 - Small, 3 Finger Modules
91663-06-014 - Medium, 6 Finger Modules
91663-09-014 - Large, 9 Finger Modules

SWITCHES
Quantities included match number of Finger Modules per Base No.
01 - JC1SDN-K
02 - JC1SDN-5
03 - JC1SDP-K
04 - JC1SDP-5
05 - JC1STP-K
06 - JC1STP-5
(See page 16 for switch details)

VALVE
0 - No Valve
1 - Valve

PARALLEL SOLUTIONS KIT BASE NO. CONTENTS

COMPONENTS	91662-04-014 (Small Kit)	91662-06-014 (Medium Kit)	91662-10-014 (Large Kit)
	QUANTITY	QUANTITY	QUANTITY
Parallel Hub	1	1	1
Clevis (Standard Mount)	2	2	2
Clevis (Reverse Mount)	2	2	2
Finger Module	4	6	10
Spacer, Full Width	6	6	6
Spacer, Half Width	2	2	2
Tierod Assortment Kit	2	2	2
Grip Plate, V-Block	1	1	1
Grip Plate, Convex	1	1	1

Each Flexion Developer Solutions Kit will include all required fasteners and hardware to assemble the complete gripper assemblies.

RADIAL SOLUTIONS KIT BASE NO. CONTENTS

COMPONENTS	91663-03-014 (Small Kit)	91663-06-014 (Medium Kit)	91663-9-014 (Large Kit)
	QUANTITY	QUANTITY	QUANTITY
Radial Hub	1	1	1
Clevis (Standard Mount)	3	3	3
Clevis (Reverse Mount)	3	3	3
Finger Module	3	6	9
Spacer, Full Width	—	3	3
Tierod Kit - 2 Finger Module Positions	—	3	3
Tierod Kit - 3 Finger Module Positions	—	3	3
Grip Plate, Centering Cone	1	1	1

Each Flexion Developer Solutions Kit will include all required fasteners and hardware to assemble the complete gripper assemblies.

SPECIFICATIONS	IMPERIAL	METRIC
OPERATING PRESSURE	5 psi* min to 120 psi max	0.4 bar* min to 8.3 bar max
MAX. OPERATING TEMPERATURE	180°F	82°C
MIN. OPERATING TEMPERATURE	-20°F	-29°C
RATED LIFE	5 million cycles	
LUBRICATION	Factory lubricated for rated life	

NOTE: *Unit may not fully articulate at 5 psi [0.4 bar] operating pressure.

FINGER FULL ARTICULATION TRAVEL				MAXIMUM GRIP FORCE AT FINGER TIP AT 5 psi [0.4 bar]		MINIMUM GRIP FORCE AT FINGER TIP AT 120 psi [8.2 bar]		ARTICULATION TIME AT 87 psi [6 bar]	
LATERAL MOVEMENT		LONGITUDINAL MOVEMENT						FULL FLEXION	FULL EXTENSION
in	mm	in	mm	lb	N	lb	N	ms	
2.20	55.9	2.95	75	1.0	4.4	13.9	62.1	25	130

NOTE: Grip forces assume 0.5 coefficient of friction between finger tip and workpiece.

GRIPPING SYSTEM COMPONENT		WEIGHT	
		lb	kg
FINGER MODULE		0.45	0.20
3-CLEVIS RADIAL HUB		0.77	0.35
2-CLEVIS PARALLEL HUB		0.69	0.31
CLEVIS		0.17	0.08
CLEVIS LINK		0.26	0.12
FULL SPACER BLOCK		0.19	0.09
HALF SPACER BLOCK		0.09	0.04
TIE-ROD SETS (REQUIRED TO ASSEMBLE FINGER GROUPS TOGETHER)	1.5 FINGER	0.04	0.02
	2 FINGER	0.05	0.02
	3 FINGER	0.07	0.03
	4 FINGER	0.08	0.04

NOTE: Weight values include weights of associated fasteners, but not interconnecting air tubing and fittings.

DETERMINING THE OPTIMAL CONFIGURATION

Contact PHD Applications Engineering or your local PHD distributor partner for assistance with your application. They are trained to assess and deliver the best Flexion solution for your automation process.

Steps to determine the optimal configuration and setup:

- For maximum grip force, grip the workpiece with the finger module's first segment being active and fully articulated (closed), trapping the workpiece against the grip plate. See the graphs on page 8.
- Finger segments 2 and 3 can be utilized as the active segments with reduced force. See the graphs on pages 9 and 10.
- Choose the hub, radial or parallel, that provides the best finger arrangement to match the shape and orientation of your workpiece.
- It is important to choose a grip plate that provides the most contact area and best centers the workpiece.
- Adjust the finger array clevises so that the fingers properly surround the part and articulate at the chosen active segment. See Diagram 1.
- The finger arrays can also be moved to either the high or low mount based on the size and shape of the workpiece.

The grip force graphs on the following pages can be used to estimate the force that each finger can deliver based on which segment is active, the amount of air pressure applied, and the coefficient of friction against the workpiece.

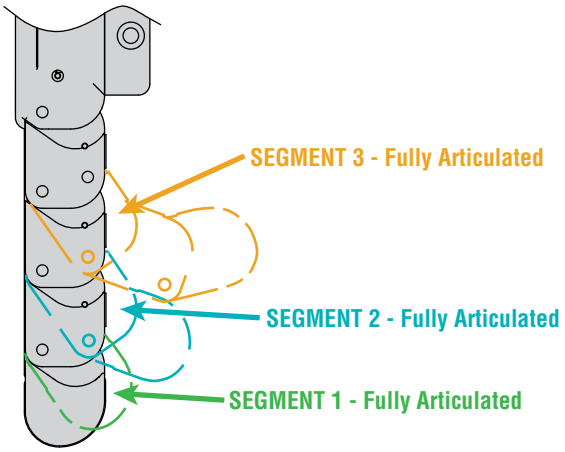

DIAGRAM 1

FINGER GRIP FORCE - SEGMENT 1 ACTIVE

Grip force varies with the amount of friction between the finger and workpiece. Graph values below assume that the coefficient of friction listed on each graph applies between the finger and workpiece.

Grip force varies with the amount of finger articulation and the distance between the finger segment pivot and the position of the contact between the segment and workpieces. The diagram to the right illustrates how to determine pivot to segment contact position distance which is used in the appropriate graph below.

Actual grip forces may be higher than those shown depending on the degree that fingers encapsulate the gripped workpiece.

DETERMINING PIVOT TO SEGMENT CONTACT POSITION DISTANCE

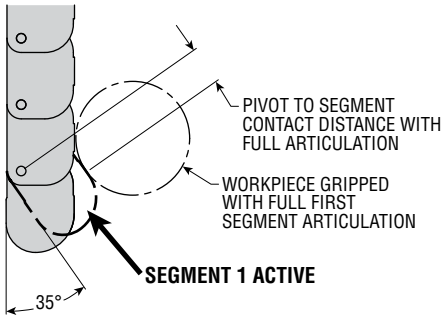

Air Pressure 5 to 20 psi [0.3 to 1.4 bar]

5 psi [0.3 bar] No Articulation; 10 psi [0.7 bar] No Articulation; 20 psi [1.4 bar] No Articulation; 5 psi [0.3 bar] Full Articulation; 10 psi [0.7 bar] Full Articulation; 20 psi [1.4 bar] Full Articulation

Air Pressure 60 to 120 psi [4 to 8 bar]

60 psi [4 bar] No Articulation; 87 psi [6 bar] No Articulation; 120 psi [8 bar] No Articulation; 60 psi [4 bar] Full Articulation; 87 psi [6 bar] Full Articulation; 120 psi [8 bar] Full Articulation

With 0.2 Coefficient of Friction Against Workpiece

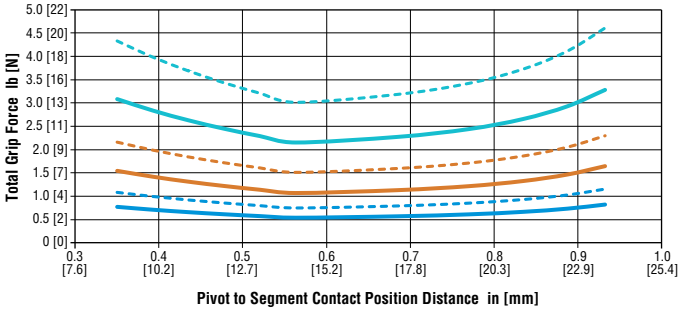

With 0.2 Coefficient of Friction Against Workpiece

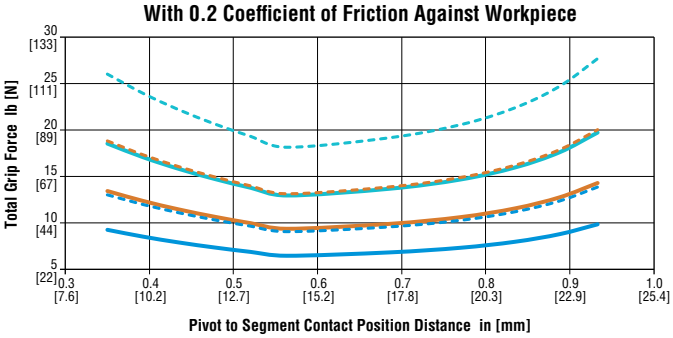

With 0.4 Coefficient of Friction Against Workpiece

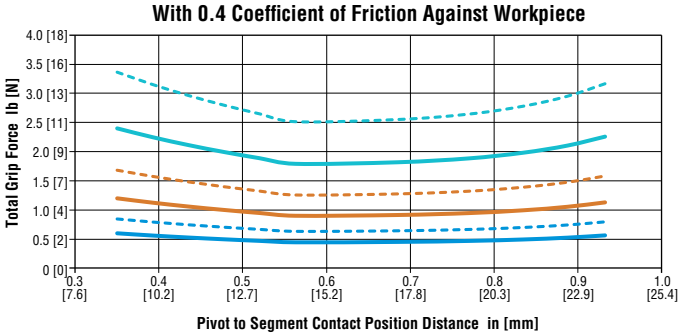

With 0.4 Coefficient of Friction Against Workpiece

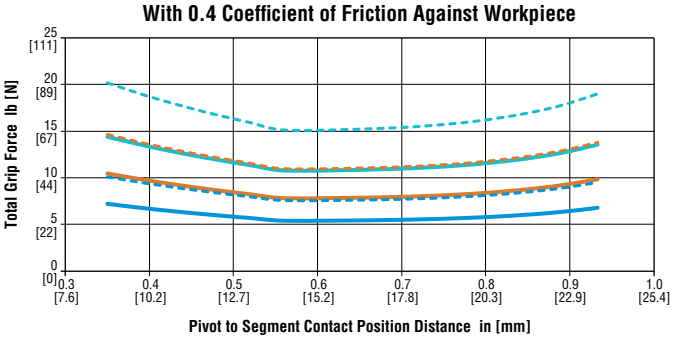

With 0.6 Coefficient of Friction Against Workpiece

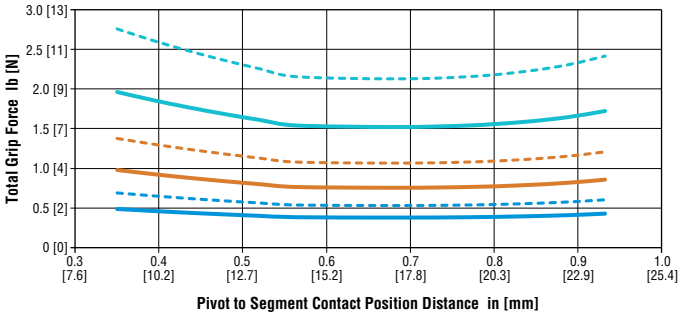

With 0.6 Coefficient of Friction Against Workpiece

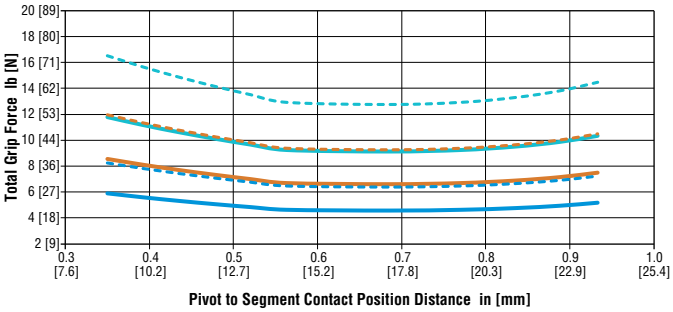

FINGER GRIP FORCE - SEGMENT 2 ACTIVE

Grip force varies with the amount of friction between the finger and workpiece. Graph values below assume that the coefficient of friction listed on each graph applies between the finger and workpiece.

Grip force varies with the amount of finger articulation and the distance between the finger segment pivot and the position of the contact between the segment and workpieces. The diagram to the right illustrates how to determine pivot to segment contact position distance which is used in the appropriate graph below.

Actual grip forces may be higher than those shown depending on the degree that fingers encapsulate the gripped workpiece.

DETERMINING PIVOT TO SEGMENT CONTACT POSITION DISTANCE

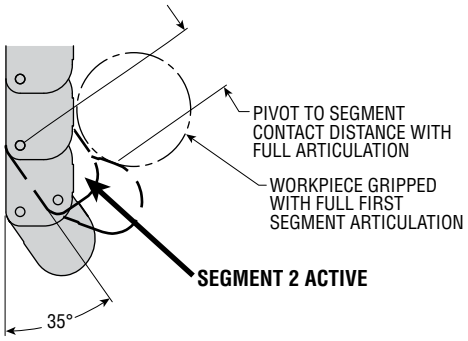

Air Pressure 5 to 20 psi [0.3 to 1.4 bar]

5 psi [0.3 bar] No Articulation
5 psi [0.3 bar] Full Articulation
10 psi [0.7 bar] No Articulation
10 psi [0.7 bar] Full Articulation
20 psi [1.4 bar] No Articulation
20 psi [1.4 bar] Full Articulation

Air Pressure 60 to 120 psi [4 to 8 bar]

60 psi [4 bar] No Articulation
60 psi [4 bar] Full Articulation
87 psi [6 bar] No Articulation
87 psi [6 bar] Full Articulation
120 psi [8 bar] No Articulation
120 psi [8 bar] Full Articulation

With 0.2 Coefficient of Friction Against Workpiece

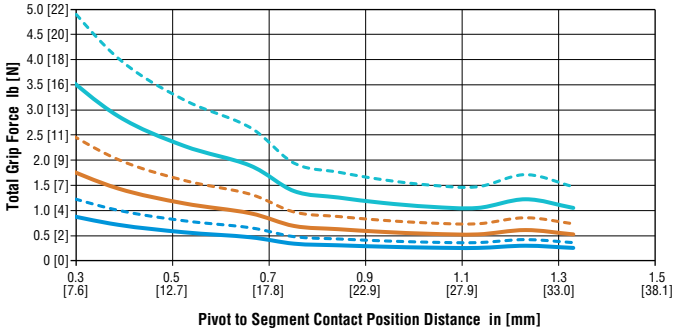

With 0.2 Coefficient of Friction Against Workpiece

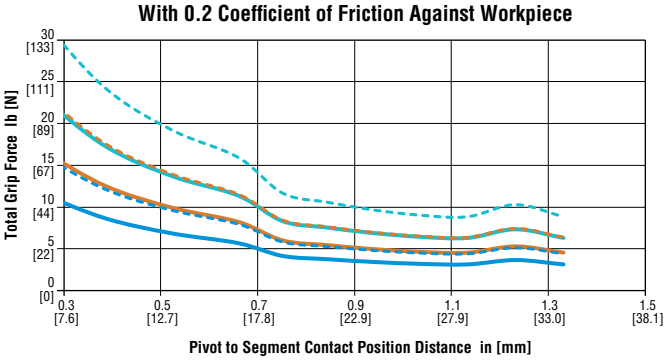

With 0.4 Coefficient of Friction Against Workpiece

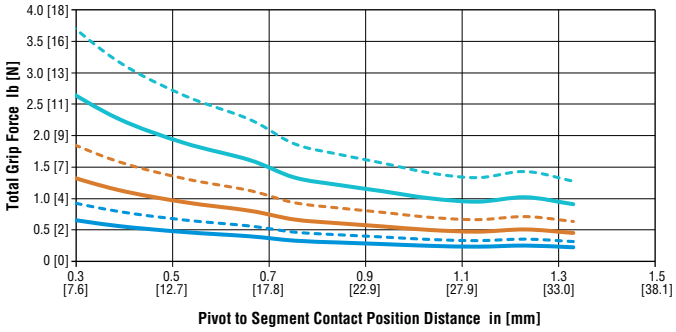

With 0.4 Coefficient of Friction Against Workpiece

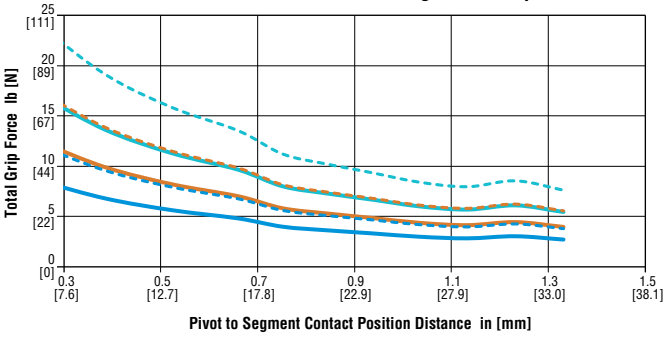

With 0.6 Coefficient of Friction Against Workpiece

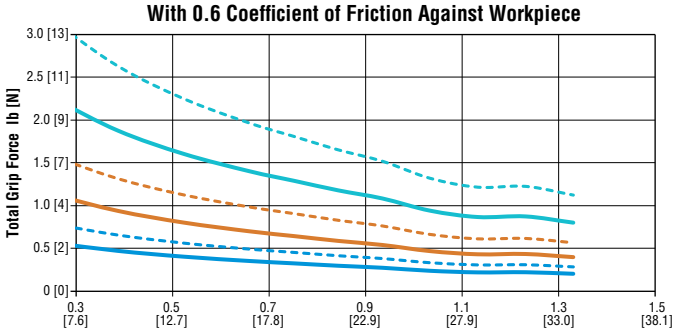

With 0.6 Coefficient of Friction Against Workpiece

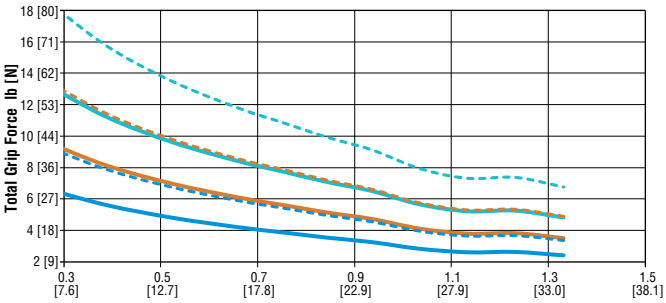

FINGER GRIP FORCE - SEGMENT 3 ACTIVE

Grip force varies with the amount of friction between the finger and workpiece. Graph values below assume that the coefficient of friction listed on each graph applies between the finger and workpiece.

Grip force varies with the amount of finger articulation and the distance between the finger segment pivot and the position of the contact between the segment and workpieces. The diagram to the right illustrates how to determine pivot to segment contact position distance which is used in the appropriate graph below.

Actual grip forces may be higher than those shown depending on the degree that fingers encapsulate the gripped workpiece.

DETERMINING PIVOT TO SEGMENT CONTACT POSITION DISTANCE

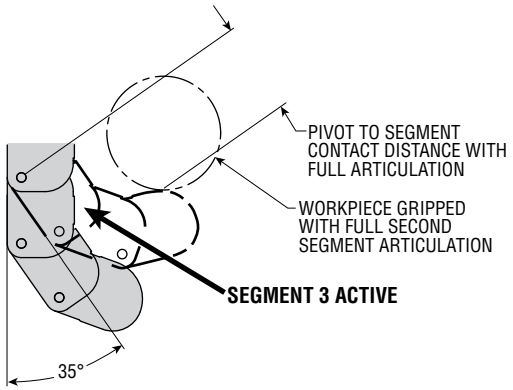

Air Pressure 5 to 20 psi [0.3 to 1.4 bar]

5 psi [0.3 bar] No Articulation; 10 psi [0.7 bar] No Articulation; 20 psi [1.4 bar] No Articulation
5 psi [0.3 bar] Full Articulation; 10 psi [0.7 bar] Full Articulation; 20 psi [1.4 bar] Full Articulation

Air Pressure 60 to 120 psi [4 to 8 bar]

60 psi [4 bar] No Articulation; 87 psi [6 bar] No Articulation; 120 psi [8 bar] No Articulation
60 psi [4 bar] Full Articulation; 87 psi [6 bar] Full Articulation; 120 psi [8 bar] Full Articulation

With 0.2 Coefficient of Friction Against Workpiece

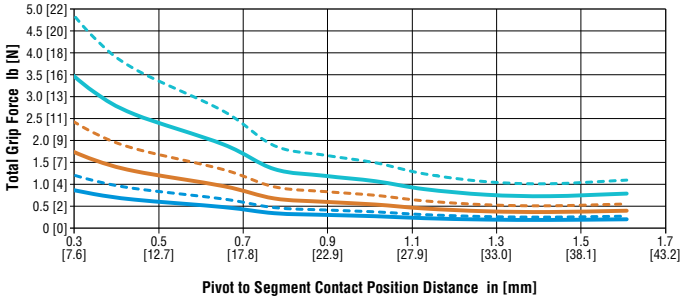

With 0.2 Coefficient of Friction Against Workpiece

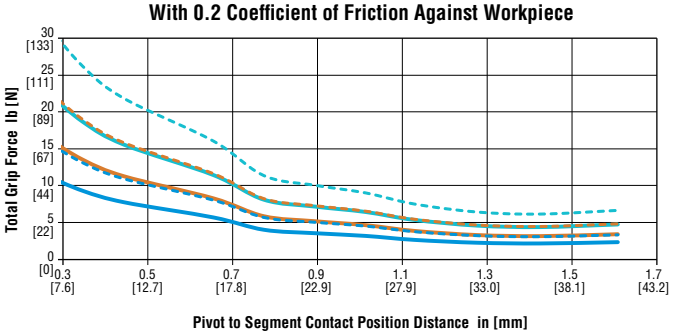

With 0.4 Coefficient of Friction Against Workpiece

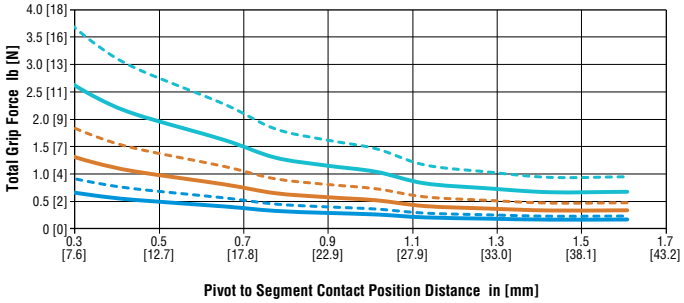

With 0.4 Coefficient of Friction Against Workpiece

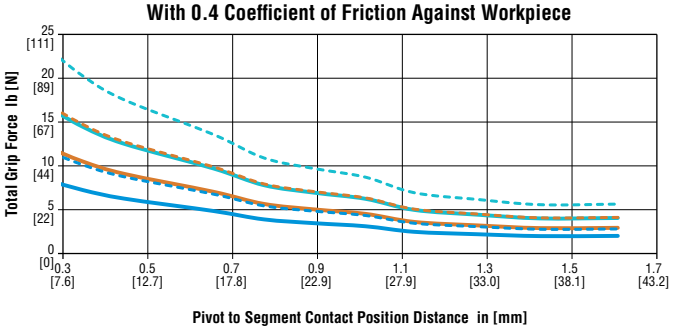

With 0.6 Coefficient of Friction Against Workpiece

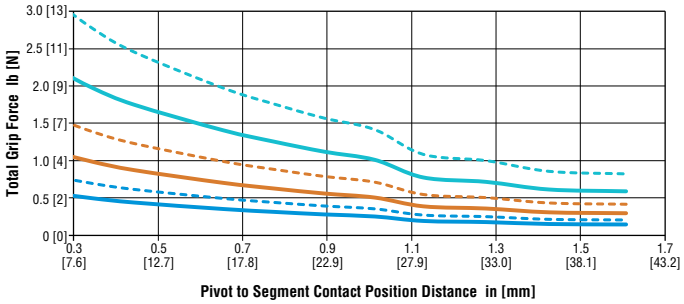

With 0.6 Coefficient of Friction Against Workpiece

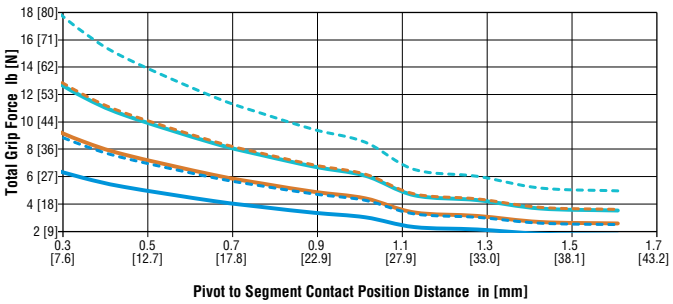

FINGER MODULE

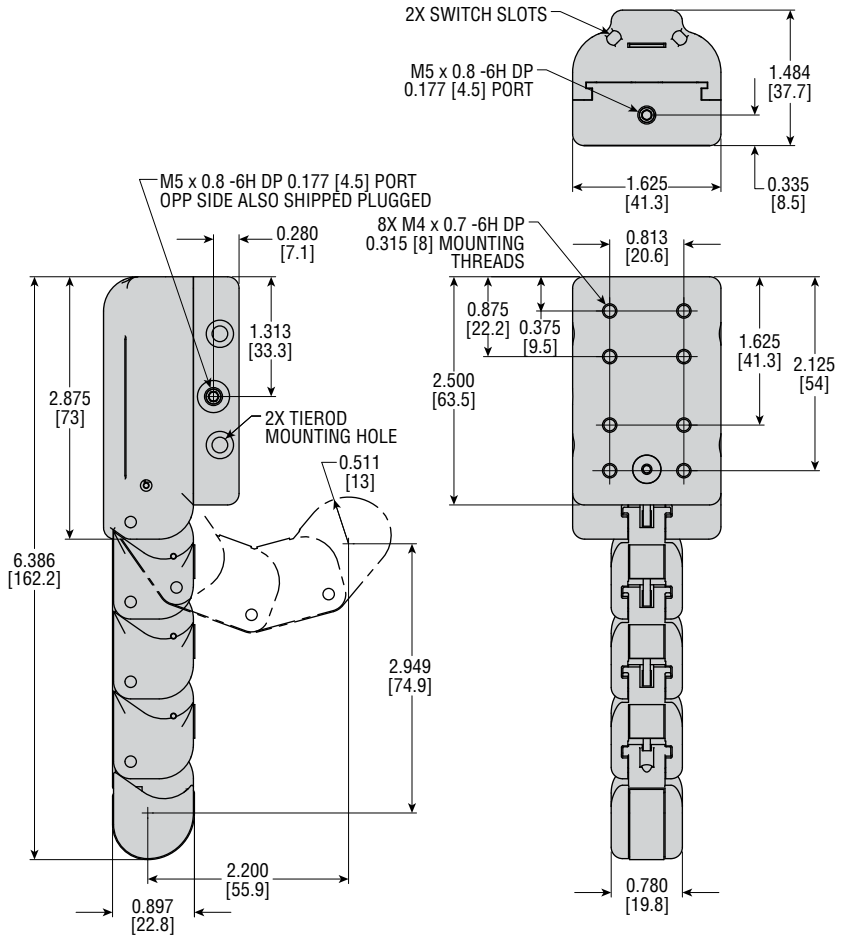

FULL FINGER WIDTH SPACER

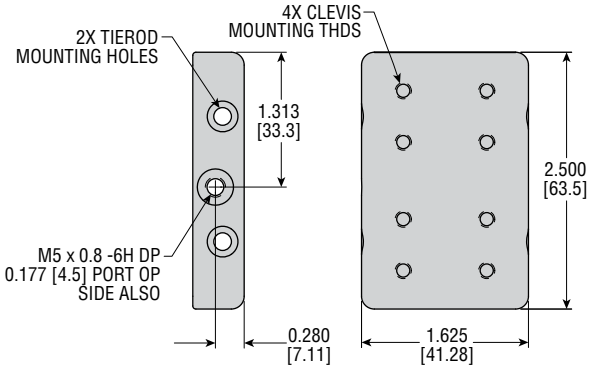

HALF FINGER WIDTH SPACER

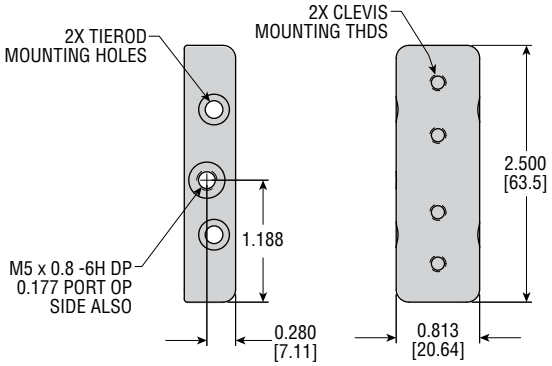

All dimensions are reference only unless specifically toleranced.

-P TWO-CLEVIS PARALLEL HUB

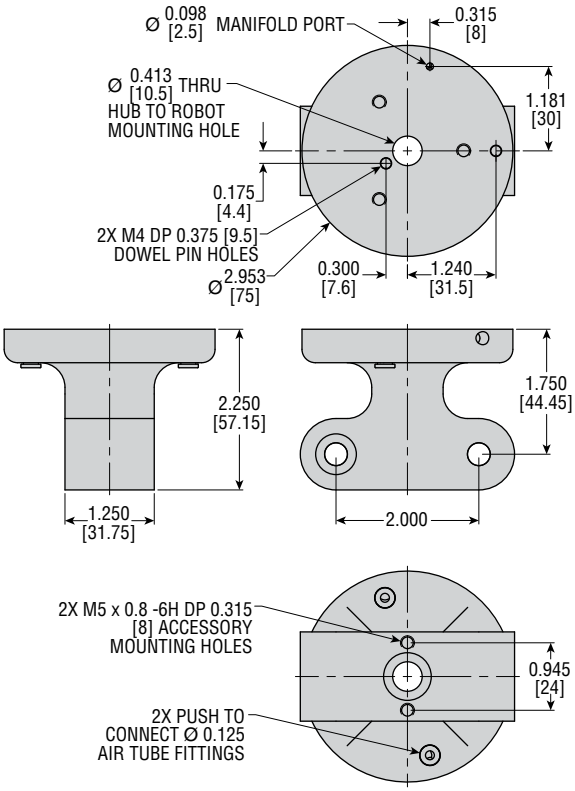

-R THREE-CLEVIS RADIAL HUB

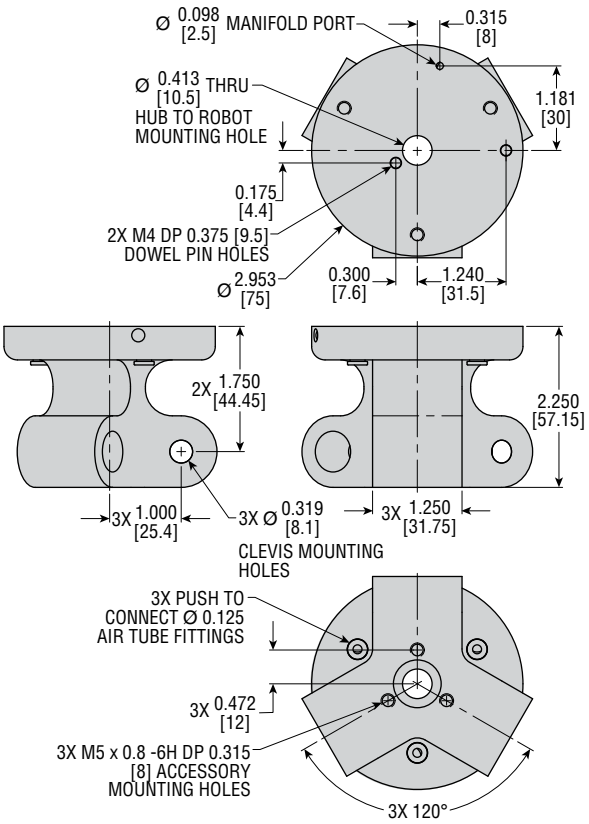

CLEVIS

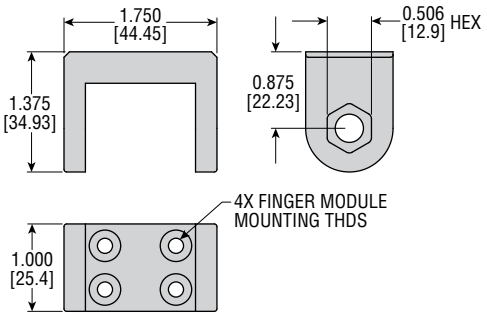

All dimensions are reference only unless specifically toleranced.

-GPA V-BLOCK (xFGxxP only)

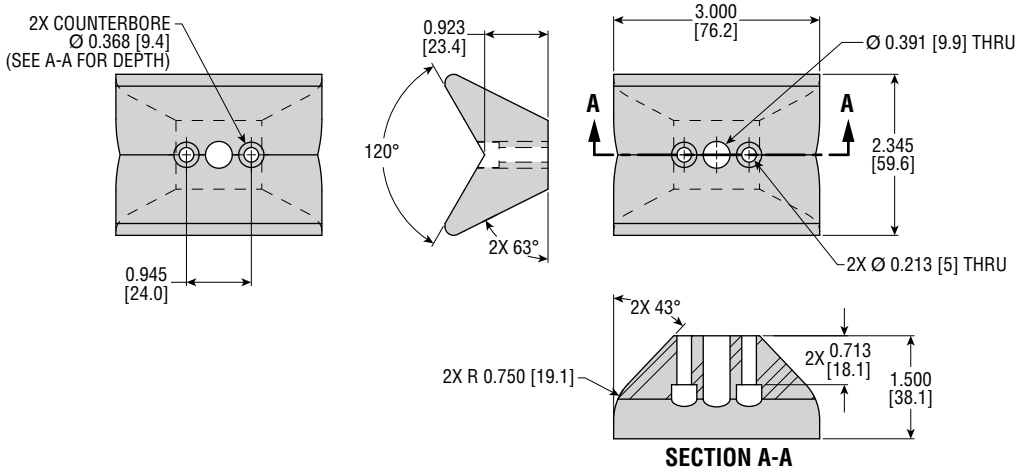

-GPB CENTERING CONE (xFGxxR only)

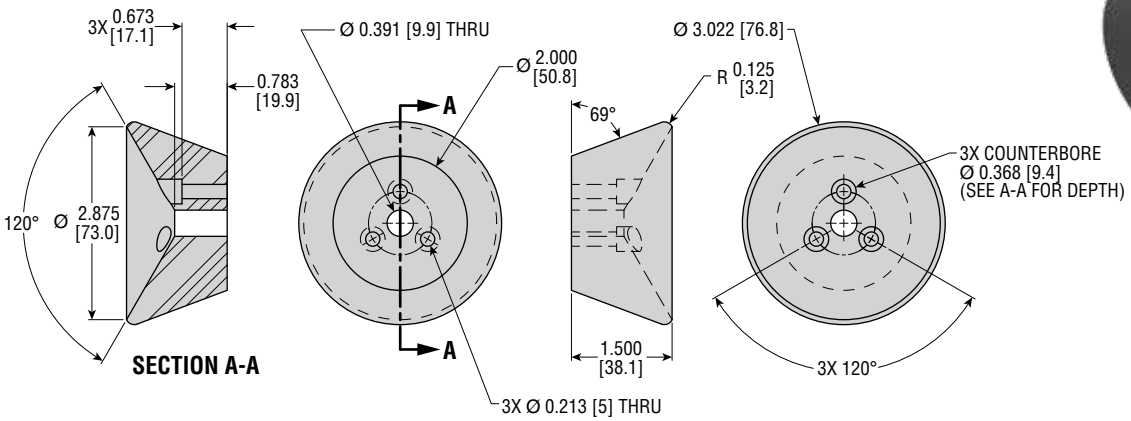

-GPX CONVEX PLATE (xFGxxP only)

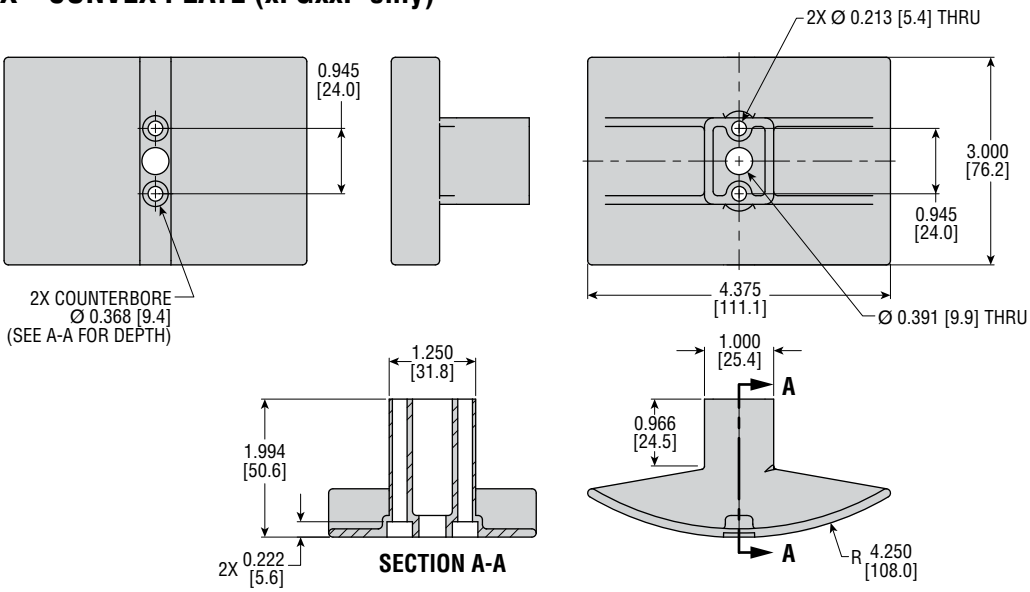

All dimensions are reference only unless specifically toleranced.

-MTA ISO 31.5 mm, 40 mm, 50 mm BOLT CIRCLE

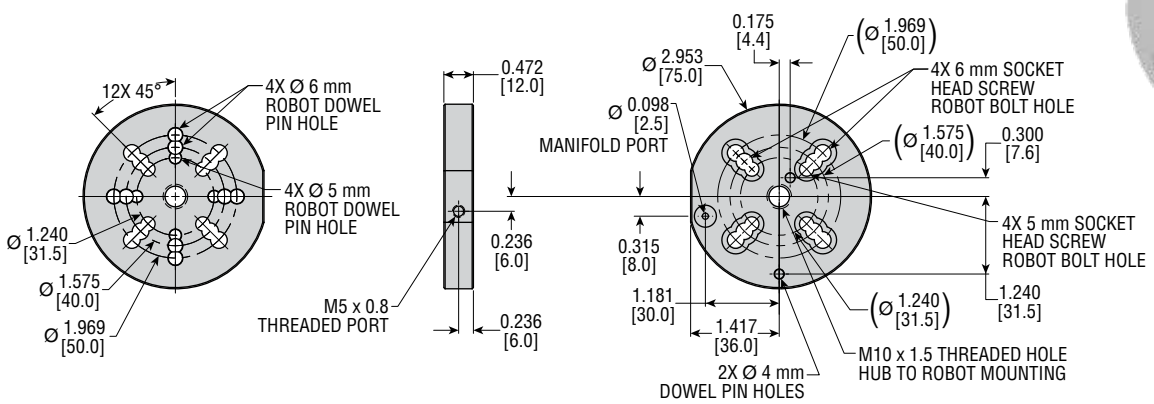

-MTB 56 mm BOLT CIRCLE

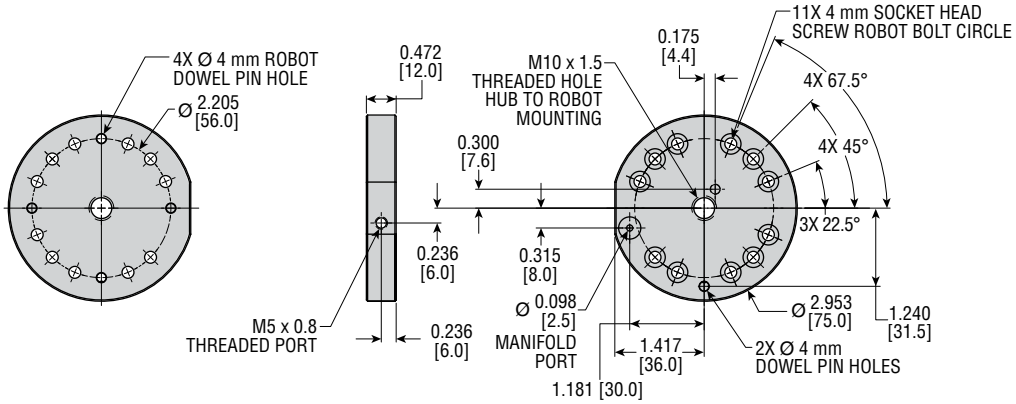

-MTC ISO 63 mm, 80 mm BOLT CIRCLE

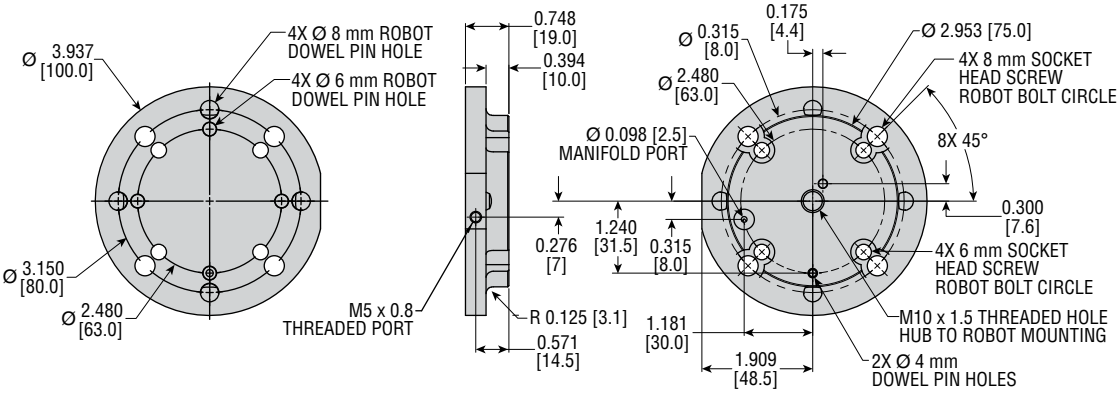

All dimensions are reference only unless specifically toleranced.

-MTD PNEU-CONNECT

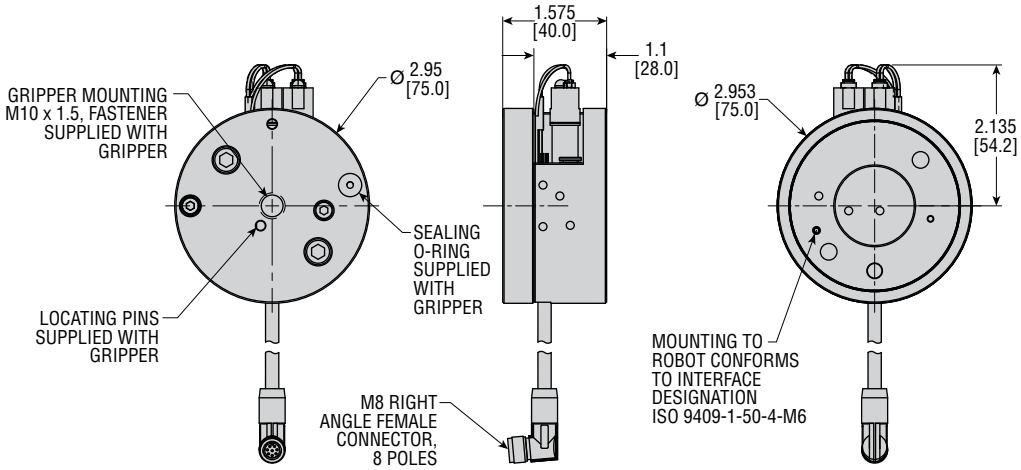

All dimensions are reference only unless specifically toleranced.

Sxxxx BUNDLED SWITCH OPTIONS

These options conveniently provide switches with additional hardware if required. Series JC1SDx-x single position and inductive proximity switches are available as NPN or PNP. Series JC1STP-x teachable switch is available as PNP only. Connection method may also be specified along with quantity of up to nine switches.

Each Series FG Flexion is sensor ready and has two 4 mm slots for optional JC1 switches for the sensing of finger flex position such as “part gripped”, “no part”, or “starting position.”

All JC1 switches have an LED indicator for convenient setting and troubleshooting. They are rated at IP67 Environmental Protection with a polyurethane (PUR) jacketed cable. Additionally, they feature integrated protection circuitry including short circuit protection, and improved switch hysteresis and magnetic response uniformity.

SWITCH BUNDLE OPTION CODE

- Sx x x x

BUNDLED SWITCH SERIES
SC - Series JC1SDx-x Single Position Switch
SE - Series JC1STP-x Teachable Switch (PNP only)

SWITCH CIRCUITRY
N - NPN (Sink)
P - PNP (Source)

CABLE TYPE
K - Quick Connect (JC1SDx-K, JC1SPT-K)
2 - 2 meter Length Cable (JC1SPT-2)
5 - 5 meter Length Cable (JC1SDx-5)

NUMBER OF SWITCHES
1 - 1 Switch
2 - 2 Switches
3 - 3 Switches
4 - 4 Switches
5 - 5 Switches
6 - 6 Switches
7 - 7 Switches
8 - 8 Switches
9 - 9 Switches

-SC OPTION

The **JC1SD Solid State Switches** are offered in 10–30 VDC current sinking (NPN) and current sourcing (PNP) versions for simple interfacing to system controllers. Solid state sensing provides for longest life and most reliable operation. JC1SD are available in cabled (5 meter) or quick connect versions.

PART NO.	DESCRIPTION
JC1SDP-5	PNP (Source), Axial Sensing, 5 meter cable
JC1SDP-K	PNP (Source), Axial Sensing, Quick Connect
JC1SDN-5	NPN (Sink), Axial Sensing, 5 meter cable
JC1SDN-K	NPN (Sink), Axial Sensing, Quick Connect

MATCHING CORDSETS

PART NO.	DESCRIPTION
63549-02	M8, 3 pin, Straight Female Connector, 2 meter cable
63549-05	M8, 3 pin, Straight Female Connector, 5 meter cable

SPECIFICATIONS	JC1xDP-x	JC1xDN-x
OPERATING PRINCIPLE	Solid State Detection of Moving Magnet	
INPUT VOLTAGE	10-30 VDC	
OUTPUT TYPE	PNP (Source)	NPN (Sink)
OUTPUT CURRENT	100 mA max., Short Circuit Protection	
VOLTAGE DROP	≤ 2.5 VDC	
SWITCH BURDEN	≤ 8 mA	
ENVIRONMENTAL	IP67	
OPERATING TEMPERATURE	-30° to 80°C	

-SE OPTION

JC1ST Teachable Switches feature two programmable outputs. Since each switch provides two outputs, the Flexion features two switch slots providing up to four outputs by using two switches. Offered in 12–30 VDC current sourcing (PNP) version only with integrated protection circuitry including short circuit protection.

PART NO.	DESCRIPTION
JC1STP-2	PNP (Source) Solid State, 12-30 VDC, 2 meter cable
JC1STP-K	PNP (Source) Solid State, 12-30 VDC, Quick Connect

MATCHING CORDSET

PART NO.	DESCRIPTION
81284-1-001	M8, 4 pin, Straight Female Connector, 5 meter cable

SPECIFICATIONS	JC1STP-x
OPERATING PRINCIPLE	Programmable Magnetic Field Characterization
INPUT VOLTAGE	12-30 VDC
NUMBER & TYPE OF OUTPUTS	Two PNP (Source), separately adjustable
OUTPUT CURRENT	100 mA max., Short Circuit Protection
VOLTAGE DROP	≤ 2.2 VDC
SWITCH BURDEN	≤ 15 mA
ENVIRONMENTAL	IP67
OPERATING TEMPERATURE	-20° to 75°C
TYP. DETECTION AREA	0-50 mm

phd Empowering Automation

9009 Clubridge Drive
Fort Wayne, Indiana 46809
Ph (260) 747-6151
phdinc.com • phdinfo@phdinc.com

Zum Carl-Alexander-Park 6
52499 Baesweiler, Germany
Tel. +49 (0)2401-619 77 0
phdinc.com • info@PHDinEurope.de